Reg. No. | | | | | | | | | | | [12EE71]

SEVENTH SEMESTER B.E EXAMINATION, DECEMBER–2015

POWER SYSTEM ANALYSIS - II

Time:3 Hours **Maximum Marks:70**

Instructions: Answer any **FIVE**full Questions.

1. a. With a neat sketch explain the following **05**

i. Oriented graph

ii. Tree

iii. Co-tree

iv. Singular matrix

v. Link

b. Obtain the oriented graph and write the basic cut set matrix for the network given below: **09**

Bus code	1-6	2-6	2-5	1-3	3-4	4-5	3-6
Admittance	J12	J35	J5	J8	J10	J5	J12

2. a. Derive an expression for formation of bus admittance matrix(Y_{bus}) by singular transformation **06**

b. Consider the power system given below. **08**

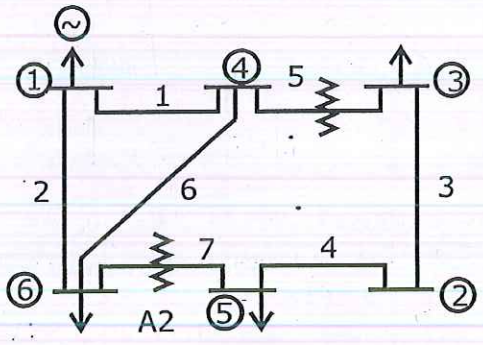

Line No	Between buses	Line impedance	Half line charging admittance	Off-nominal turn ratio
1	1-4	0.08+j0.37	0.007	-
2	1-6	0.123+j0.518	0.010	-
3	2-3	0.723+j1.05	0.0	-
4	2-5	0.282+j0.64	0.0	-
5	4-3	0.0+j0.133	0.0	0.909
6	4-6	0.097+j0.407	0.0076	-
7	6-5	0.0+j0.3	0.0	0.976

A static shunt capacitor is connected at bus 4 with admittance j0.005pu. formulate the y_{bus}.

SCHOOL OF ENGINEERING & TECHNOLOGY JAIN UNIVERSITY BANGALORE LIBRARY DATE

3. a. Give the bus classification for load flow explaining the significance. **06**

b. Develop the Gauss-Seidel load flow model for a power system a slack bus and (n-1) number of PQ type buses. Give the flowchart of the algorithm. **08**

4. a. Draw the flowchart of Newton Raphson method in polar co-ordinate for load flow analysis. **07**

b. For the power system shown in fig4.(b), the line and bus data is given in tables. Considering bus 1 as the slack bus, use the following methods to obtain one iteration of the load flow solution **07**

i. Newton–Raphson with Y_{bus}

ii. Decoupled method.

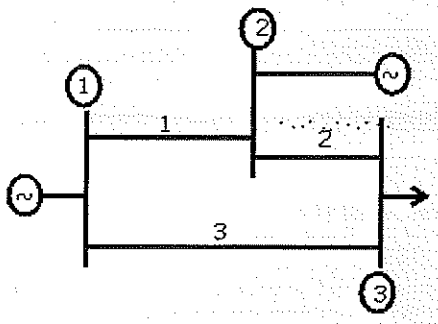

Line data

Line Number	B/w buses	Line Impedance	Half line charging admittance
1	1-2	0+j0.1	0
2	2-3	0+j0.2	0
3	1-3	0+j0.2	0

Bus data

Bus Number	Type	Generator		load		Voltage magnitude | v |	Reactive power limit	
		P	Q	P	Q			
1	Slack	-	-	-	-	1.0	-	-
2	P-V	5.3217	-	-	-	1.0	0	5.3217
3	PQ	-	-	3.6392	0.5339	-	-	-

5. a. List the merits and demerits of RungeKutta method. **06**

b. Explain the solution of swing equation by point by point method. **08**

6. a. Explain the solution of modified Euler's method for determining transient stability of power system. **07**

b. Discuss representation of load for transient stability studies. **07**

7. a. Write the algorithm for building Z_{Bus} by modifying the existing Z_{Bus} **07**

b. The one line diagram of a three bus system is shown below.Each generator is represented as a voltage source behind transient reactance. Assuming the system is running on no-load and neglecting shunt capacitances, determine the fault current,bus voltages and line currents when a balanced three phase fault occurs on **07**

a. Bus 1

The fault impedance in each cares is Z_1=j 0.15pu.

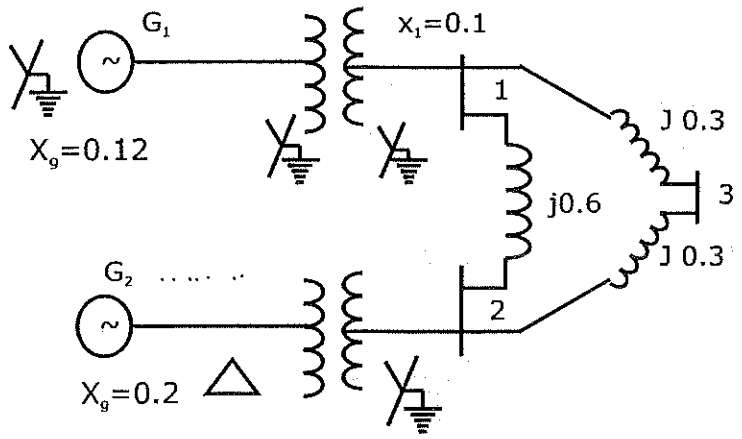

8. a. Derive an expression for economic dispatch including transmission losses. **07**

b. Incremental fuel cost in $ /Mwh for two units are given below. **07**

$$\frac{dF_1}{dP_{G_1}} = 0.01P_{G_1} + 2.0 \qquad \$/Mwh$$

$$\frac{dF_2}{dP_{G_2}} = 0.012P_{G_2} + 1.6 \qquad \$/Mwh$$

The limits on the plants are P_{min}= 20Mw, P_{max}=125 Mw. Obtain the optimal schedule if the load varies from 50 to 250Mw.